SK-K618

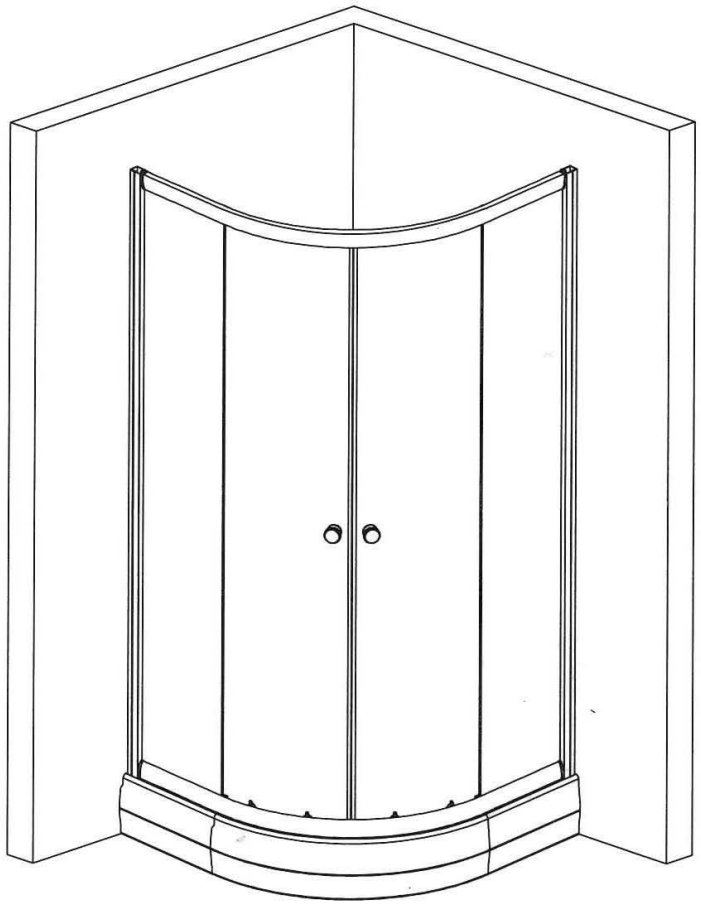

No.	Sketch	QTY.	No.	Sketch	QTY.
A		2	J	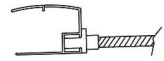	2
B		1	K		1
C	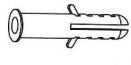 Ø6	6	K1		1
D	 St3.5X10	4	L	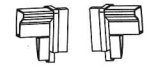	2
E	 St4X10	22	M	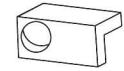	2
F	 St5X35	6	N		2
G		2	O		8
H		2	P		4
I		2	Q		4

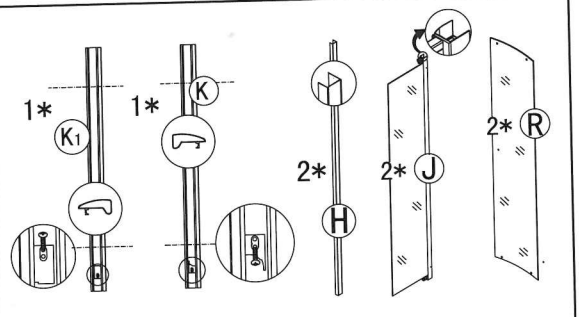

	a
800X800	760
900X900	860
1000X1000	960

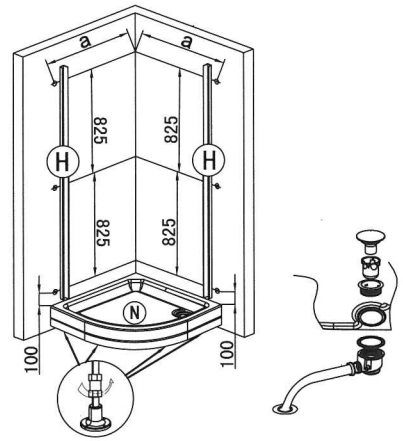

1

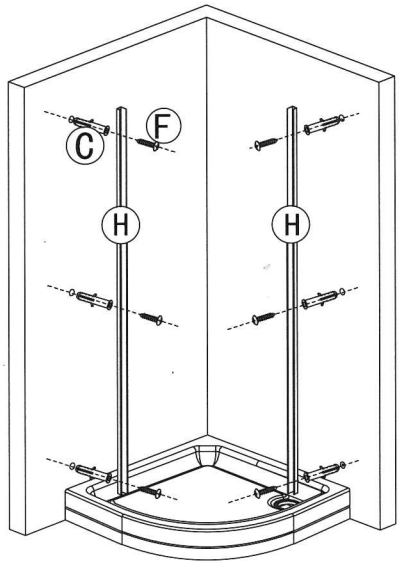

2

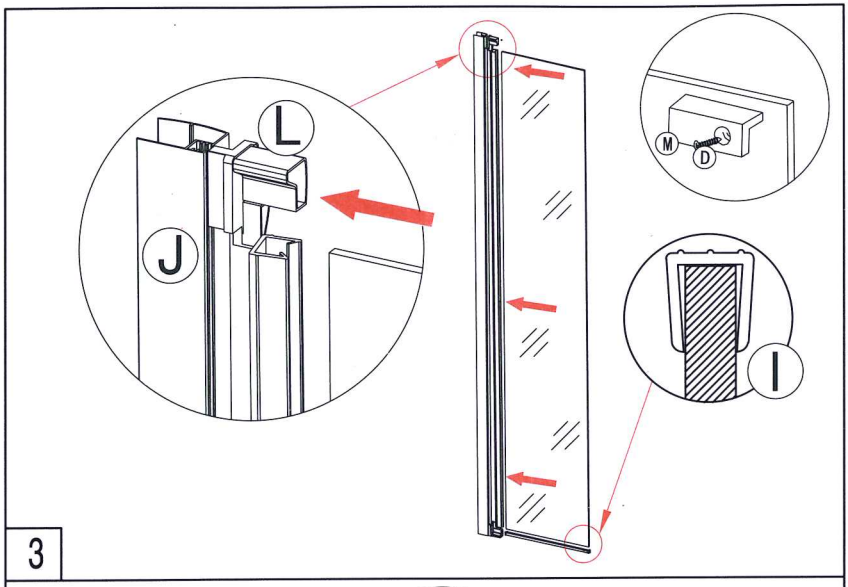
L
J
M
D
I
3

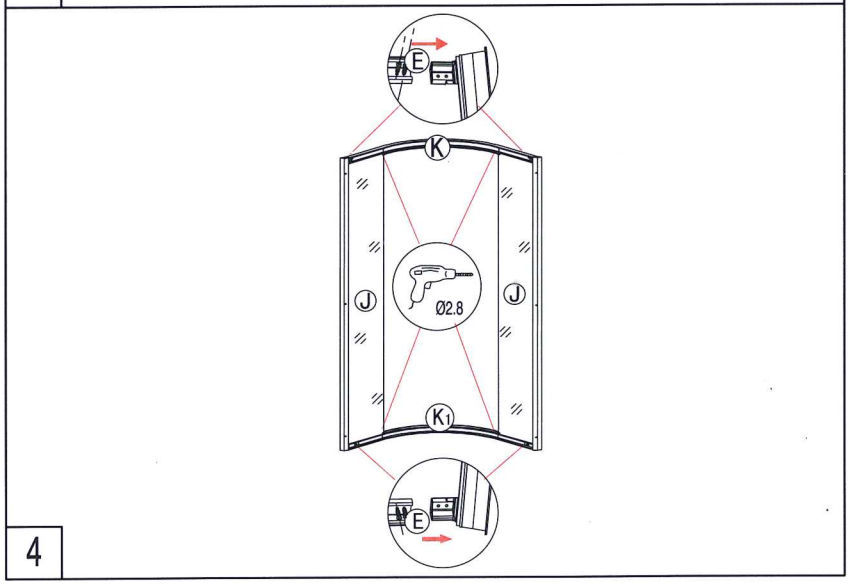
E
K
J
Ø2.8
J
K1
E
4

5

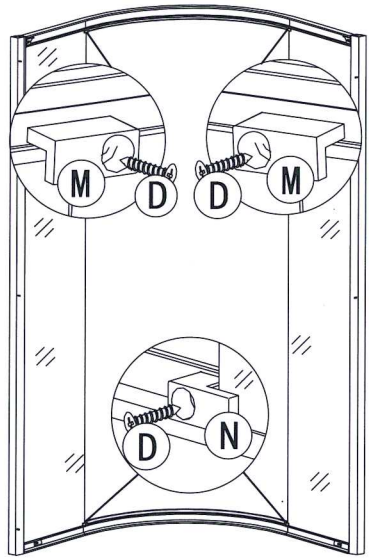

6

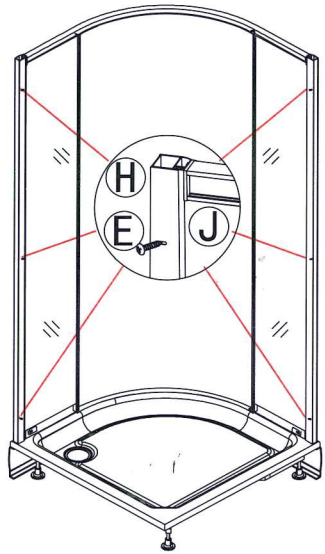

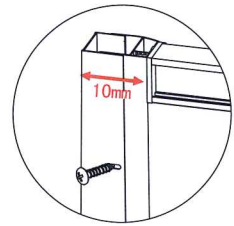

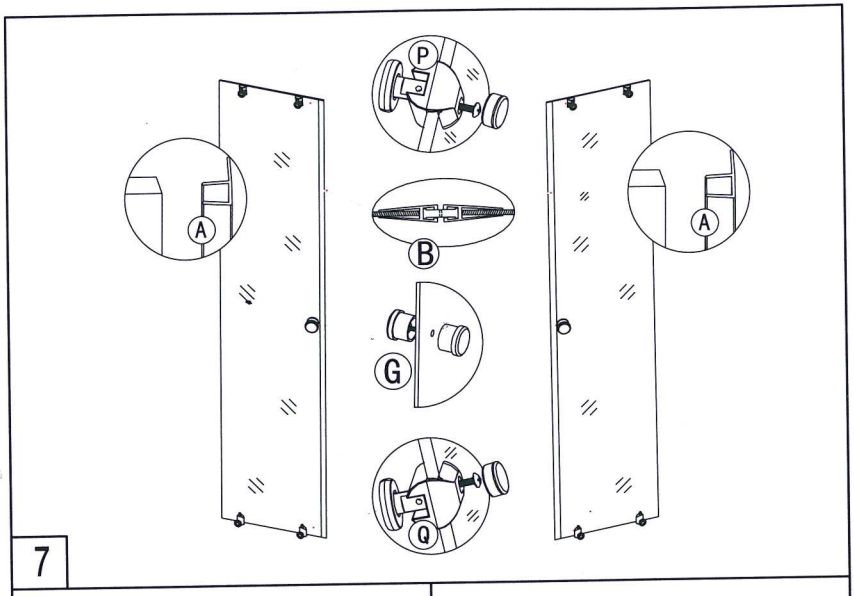
P
A
B
G
Q
A
7

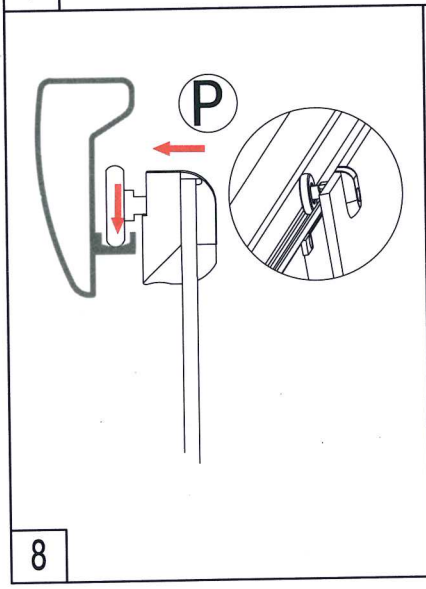
P
8

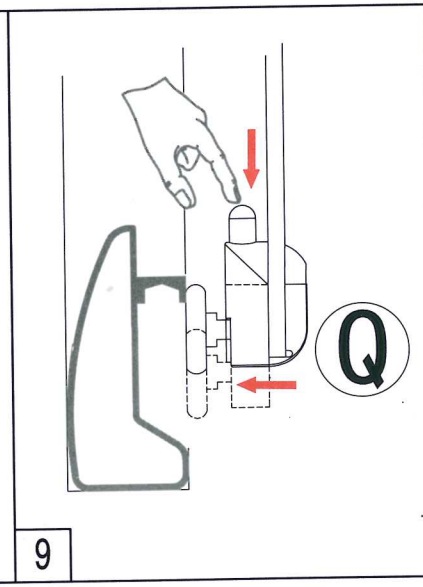
Q
9

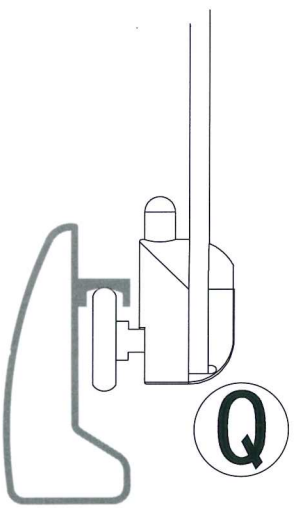

10

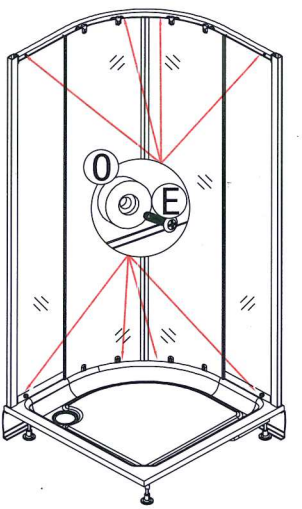

11

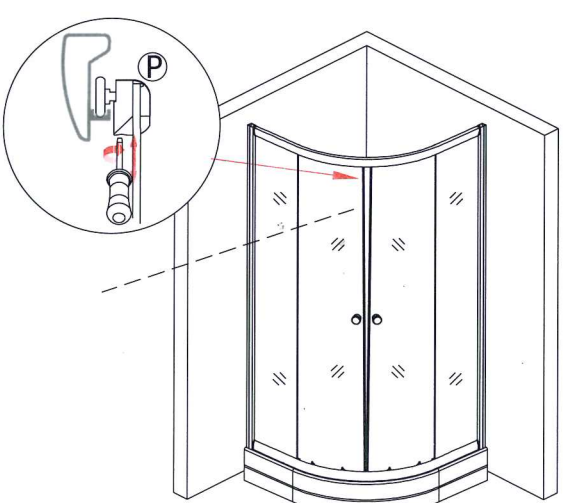

12

